jaquar.com

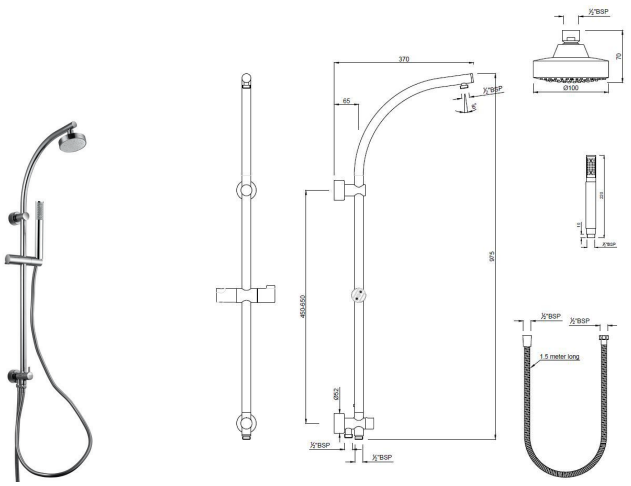

Product Code	SHA-CHR-1217RSHK1
Description	Exposed Shower Pipe with Provision for Simultaneous Working of Showers with Operating Diverter Knob, Round Shape 24mm, Size 975X370mm with Sliding Holder for Hand Shower, Wall Bracket & 8mm dia, 0.5M Long Flexible hose for Connection to an Exposed Shower Mixer with Shower Kit (1989, 5537N & 549D8)
Flow Rate	OHS :- 17.26 LPM @ 3 bar HSH :- 21.74 LPM @ 3 bar
Flow regulator	By using flow regulators + Brass Housing (Product should be ordered with suffix as GA-6.0 LPM, GB-8.0 LPM, & GC-12.0 LPM @ 3.0 Bar pressure) one can regulate the flow rate.
Recommended Water Pressure	1.0 Bar - 3.0 Bar
Spray Modes	Single Function
Material Composition Specification in Percentage	**Brass Rod as per IS:319-1989** Cu (56.0-59.0), Pb (2.0-3.5), Fe (0.0-0.35), Total Impurity (0.0-0.7), Zn (Remainder) **Brass Sheets as per IS:410-1977** Cu (61.5-64.5), Pb (0.0-0.3), Fe (0.0-0.075), Total Impurity (0.0-0.6), Zn (Remainder) **Brass Pipe as per IS:407-1996** Cu (62.0-65.0), Pb (0.0-0.3), Fe (0.0-0.01), Total Impurity (0.0-0.6), Zn (Remainder) **ABS Specification** Specific Gravity g/cm2 (1.06-1.10), Melt Mass Flow Rate g/10 min. (20-26), Rockwell Hardness (95-115), DTUL @ 66 psi /0.45 MPa 0C (78-102)
Technology	Advanced Rubit - Lime scale deposits stick to the shower face can be easily rubbed off by hand or flannel.
Water Tightness	5 bar (Pass)
Finish	Plating: Nickel-10.0 micron Chromium-0.3 micron Salt Spray (200 hrs + Validated) Adhesion (Pass)
Available Colour Finishing	CHROME (CHR)

DISCLAIMER: Our every effort has been made to ensure factual accuracy, the information presented subject to changes due to requirements in different sites, markets and/ or countries. 10% variation in flow rate may be possible. Jaquar reserves the right to make the necessary amendments at any time without prior notice.