jaquar.com

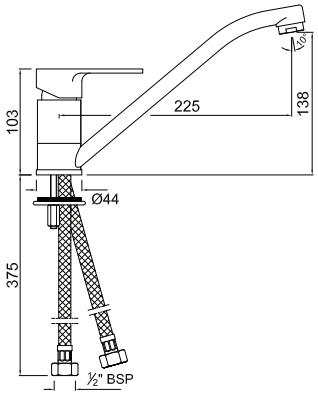


| | |
|---|---|
| **Product Code** | VGP-CHR-81173B |
| **Description** | Single Lever Mono Sink Mixer with Swivel Spout & 375mm Long Braided Hoses |
| **Connection Size** | Braided hoses, 1/2" FIP (WRAS Approved)<br>Withstand pressure of 10 Bar |
| **Flow Rate** | 14.45 LPM @ 3 bar |
| **Flow regulator** | By using flow regulators (Product should be ordered with suffix as G-2.5 LPM, GA-6.0 LPM, GB-8.0 LPM, GC-13.0 LPM, GD-3.8 LPM & GE-1.3 LPM @ 3.0 Bar pressure) one can regulate the flow rate. |
| **Recommended Water Pressure** | 0.5 Bar - 5 Bar |
| **Brass Specification in Percentage** | **Brass Ingots as per IS:1264-1997**<br>Cu (58.0-63.0), Sn (0.0-1.0), Pb (0.5-2.5), Ni (0.0-1.0), Al (0.2-0.8), Mn (0.0-0.5), Total Impurity (0.0-2.0), Zn (Remainder)<br><br>**Brass Rod as per IS:319-1989**<br>Cu (56.0-59.0), Pb (2.0-3.5), Fe (0.0-0.35), Total Impurity (0.0-0.7), Zn (Remainder)<br><br>**Brass Pipe as per IS:407-1996**<br>Cu (62.0-65.0), Pb (0.0-0.3), Fe (0.0-0.01), Total Impurity (0.0-0.6), Zn (Remainder) |
| **Cartridge Specification** | NSF-61 Approved Cartridge with Temperature Limiter<br>Cartridge with Brass Spindle<br>Life Cycle EN 817: 70,000 cycles (Standard)<br>- 0.21 million Cycles as per EN 817*<br>- 1.05 million Cycles (ON/OFF)* |
| **Water Tightness** | 16 bar (Pass) |
| **Pressure Resistance** | 25 bar (Pass) |
| **Finish** | Plating: Nickel-10.0 micron Chromium-0.3 micron<br>Salt Spray (500 hrs + Validated)<br>Adhesion (Pass) |
| **Aerator Size** | WRAS, ACS Approved (24X1) |
| **Available Colour Finishing** | Antique Bronze (ABR), Antique Copper (ACR), Black Chrome (BCH), Black Matt (BLM), Gold Dust (GDS), Full Gold (GLD), Graphite (GRF), Stainless Steel Finish (SSF) & White Matt (WHM) |
| * As per in-house testing done on automatic life cycle testing machine made by Giussain, Italy | |
| DISCLAIMER: Our every effort has been made to ensure factual accuracy, the information presented subject to changes due to requirements in different sites, markets and/ or countries. 10% variation in flow rate may be possible. Jaquar reserves the right to make the necessary amendments at any time without prior notice. | |