jaquar.com

Image is only for illustration purpose

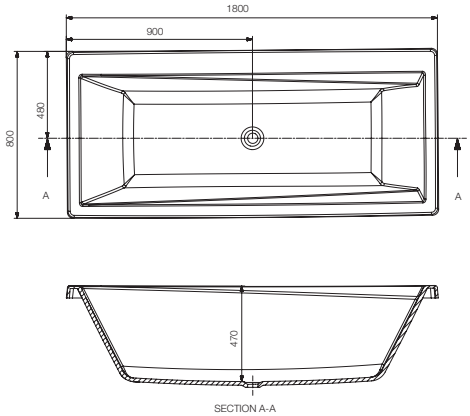

Model :	Kubix
Category:	Built-in Bathtub
Code:	JBT-WHT-KUBIX180X
Size (mm):	1800 x 800 x 470
Material:	Acrylic PMMA
Reinforcement:	PU GREEN
Accessories Included:	NA
Accessories Excluded:	**Front Panel:** JWA-WHT-FP180X **Side Panel:** JWA-WHT-SP80X **Drain & Overflow with filler:** JWA-CHR-132201 **Drain & Overflow:** JWA-CHR-DRNPIPE80 **Frame:** JWA-BLK-FRAME180X80 **Feet:** IWA-CHR-ACC00510X **Headrest:** JWA-BLK-HRCP750GAC06
Features	NA