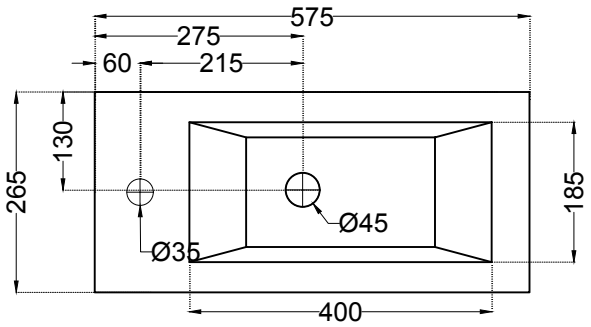

TOP VIEW

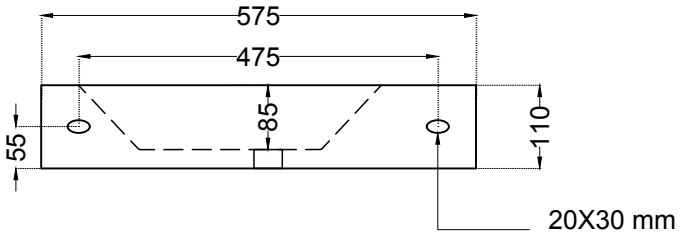

BACK VIEW

Jaquar Group
Global Headquarters
Plot No. 3, Sector– M–11, IMT Manesar
Gurgaon, NCR – 122050, India
E–mail : Sales: support@jaquar.com
Customer Service : service@jaquar.com

ITEM CODE	JDS-WHT-25805LTH
ITEM TYPE	WALL HUNG BASIN
ITEM SIZE	875X265X110 mm

ALL DIMENSIONS ARE IN MM. (TOLERANCE ± 5 MM)